MRK.	DATE	REVISION	SIGN
△1			

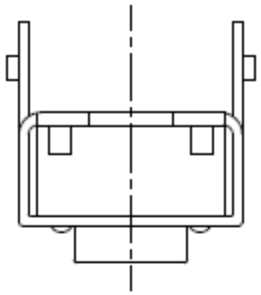

P.C.B MOUNTING HOLES

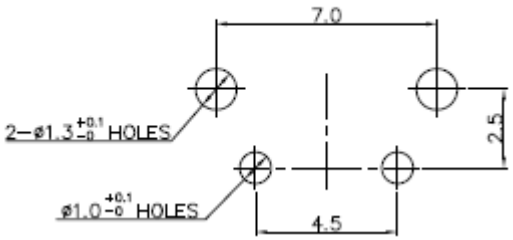

CIRCUIT DIAGRAM

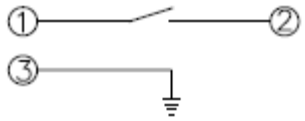

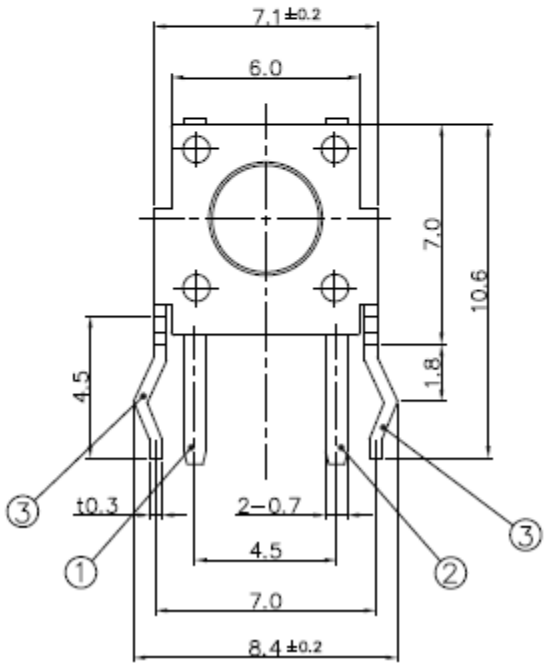

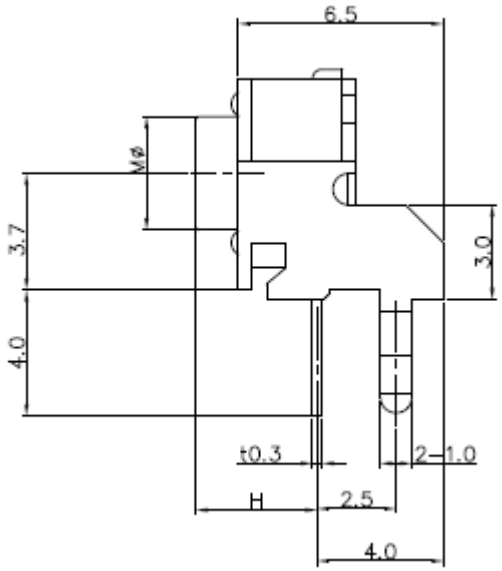

SPECIFICATION

1. RATING : DC 12V 50mA
2. TRAVEL : 0.25 ±0.1mm
3. CONTACT RESISTANCE : 100mΩ MAX.
4. OPERATING FORCE : 160±50gf
5. BOUNCE : 10m SEC MAX.
6. LIFE CYCLE : 80,000 CYCLE

MODEL	H (mm)	M(Ø)
STP-1236	3.15	3.4
STP-1236A	3.85	3.4
STP-1236B	8.35	3.3
STP-1236C	6.85	3.4
STP-1236D	11.85	2.8
STP-1236G	5.85	3.4

NO.	DESCRIPTION	MATERIAL	COLOR/FINISH	Q.TY	VENDOR
01	-	-	-	1	-

DRAW/DESIGNED	CHECKED	APPROVED	G.TOL	TITLE	TACT SWITCH	
W.J.LEE	J.P.ROH	K.I.LEE	±0.1			
			UNIT mm	SCALE 1:1	MODEL STP-1236X	SHEET
邦斯达 BONSDA	SHENZHEN ZIGENG TECHNOLOGY CO., LTD.		SIZE A4	DRAW NO. BSD-STP-12360-S-01		1/1